DIMENSIONS IN INCHES (MILLIMETERS)
DO NOT SCALE DRAWING .....

Dwg. No. GRS-2012-2XXX

PANEL THICKNESS
.025" to .180" (0.64mm to 4.57mm)

OPTIONS:

PANEL PIERCING

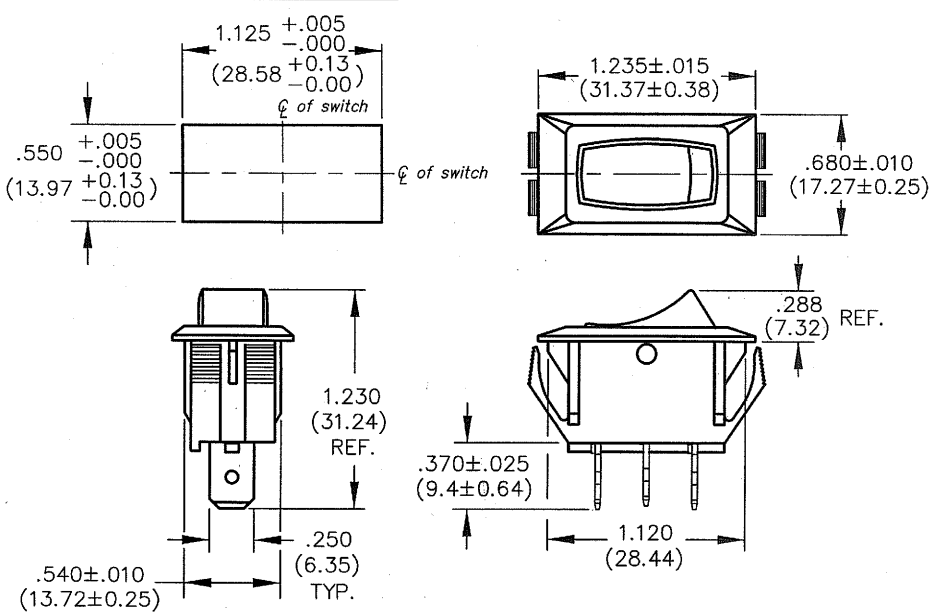

POLARIZED PANEL PIERCING

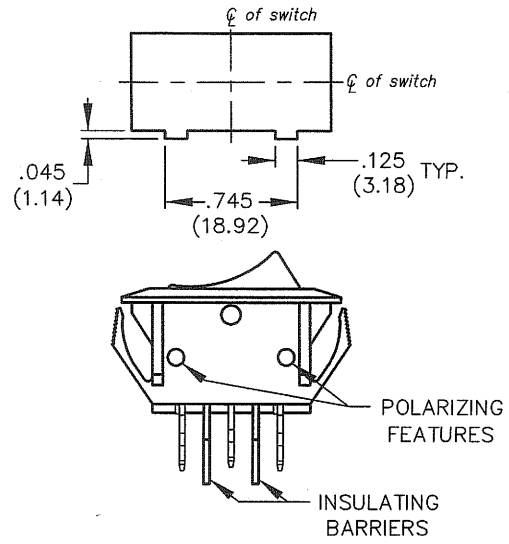

TERMINAL OPTIONS:

.250" Wide Terminal is standard as Shown in drawing.
.187" Wide Terminal is optional.

THIS INFORMATION IS CONFIDENTIAL AND PROPRIETARY TO CW INDUSTRIES INCORPORATED AND ITS AFFILIATES. IT MAY NOT BE DISCLOSED TO ANYONE, OTHER THAN CW INDUSTRIES PERSONNEL, WITHOUT WRITTEN AUTHORIZATION FROM CW INDUSTRIES INCORPORATED, SOUTHAMPTON, PENNSYLVANIA USA.

1	2	3	4	5	6	7	8	9	10

B-FORMAT 2002

REVISIONS

RELEASED. DGW 7-06-2010 JUL 28 2010 0

PDF FILE MADE

CW INDUSTRIES
Southampton, Pa. 18966

TOLERANCES UNLESS OTHERWISE SPECIFIED

2 Place Decimal ±.010	METRIC
3 Place Decimal ±.005	1 Place Dec. ±.25mm
Angles ..... ±1°	2 Place Dec. ±.13mm

Made for: CW IND.
Drawn by: DGW 7-06-2010
Checked by: G. Guld 7-27-10
Approval: G. Guld 7-27-10

Title: ROCKER SWITCH ASSEMBLY S.P.D.T. WITH OPTIONS 1.125 x .550 PANEL

Division: SWITCH

Dwg. No. GRS-2012-2XXX

MASTER