THIS INFORMATION IS CONFIDENTIAL AND PROPRIETARY TO CW INDUSTRIES INCORPORATED AND ITS AFFILIATES. IT MAY NOT BE DISCLOSED TO ANYONE, OTHER THAN CW INDUSTRIES PERSONNEL, WITHOUT WRITTEN AUTHORIZATION FROM CW INDUSTRIES INCORPORATED, SOUTHAMPTON, PENNSYLVANIA USA.

DIMENSIONS IN INCHES (MILLIMETERS)
DO NOT SCALE DRAWING .....

Dwg. No. GRL-2011-1603

PANEL PIERCING

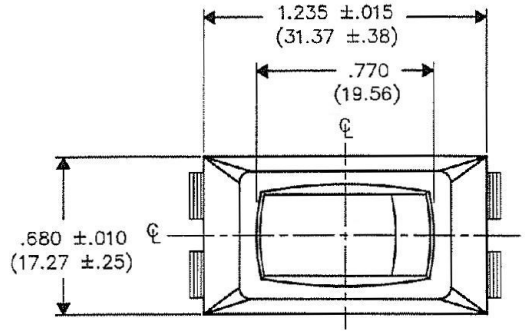

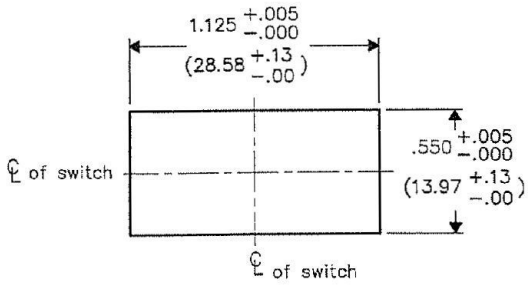

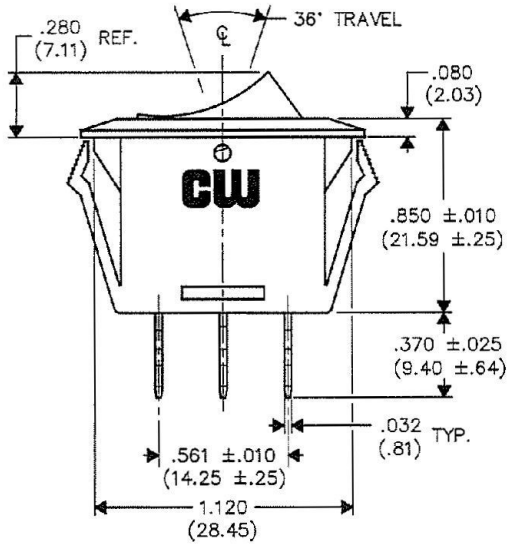

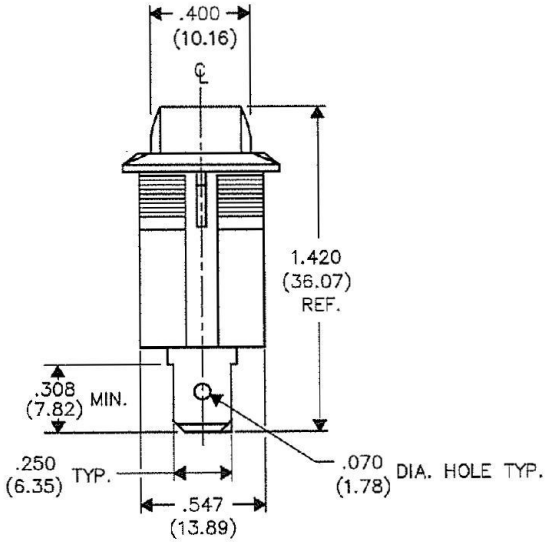

BUTTON COLOR– Green Transparent

HOUSING COLOR– Black

SWITCH RATING:

16A AC 125V 12A 250 VAC
3/4 H.P. 125–250VAC
10A 14V (T)
12A (6)A @ 250~ T –55°

UL/CSA/VDE

1	2	3	4	5	6	7	8	9	10

FORM-B3

REVISIONS

RELEASED 0
DGW 6/22/2020
CL 6/24/20

PDF File Made

ID. No:

CW INDUSTRIES
Southampton, Pa. 18966

TOLERANCES UNLESS OTHERWISE SPECIFIED

2 Place Decimal ±.010	METRIC
3 Place Decimal ±.005	1 Place Dec. ±.25mm
Angles ..... ±1°	2 Place Dec. ±.13mm

Made for: CW IND.
Drawn by: DGW 6/22/20
Checked by: G. GULD 6-22-20
Approval: 6/24/20

Title: ROCKER SWITCH ASSEMBLY (SNAP IN) S.P.–S.T. LAMP STYLE

Division: SWITCH

Dwg. No. GRL-2011-1603