DIMENSIONS IN INCHES (MILLIMETERS)
DO NOT SCALE DRAWING .....

Dwg. No. GR-2023C-0000

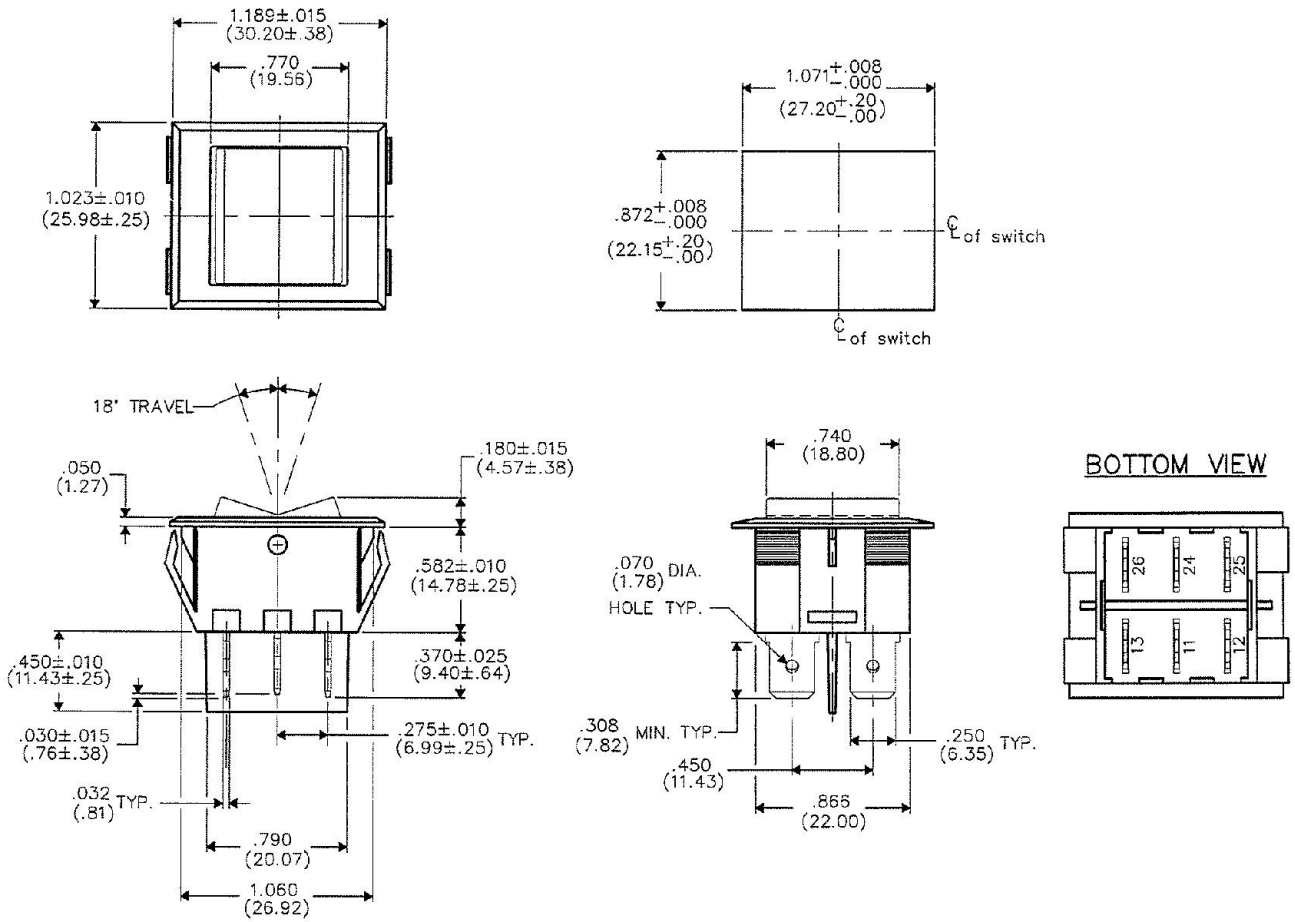

B-FORMAT 2002

REVISIONS

0	RELEASED. SPR 12-11-90 RBK DEC 13 1990	
1	.750 WAS .740 SPR 2-21-91 RBK FEB 27 1991	
2	ADDED TOLERANCE SPR 3-12-91 RBK 3-12-91	
3	.740 WAS .750+.005 −.015 SPR 3-16-93 GG 4-05-93	
4	UPDATED TITLE DESCRIBING SWITCH FUNCTION. DGW 11-17-93 GG 11-18-93	
5	REDRAWN W/NEW FORMAT. DGW 12-11-2006 G.G. FEB 01 2007	

ATTENTION

THIS DRAWING AND ITS ATTACHMENTS, IF ANY, ARE PROPRIETARY TO CW INDUSTRIES AND DESCRIBE DESIGNS THAT ARE CONFIDENTIAL AND MUST NOT BE DISCLOSED UNLESS AUTHORIZED, IN WRITING, BY AN OFFICER OF CW INDUSTRIES.....

PDF FILE MADE

CW INDUSTRIES
Southampton, Pa. 18966

TOLERANCES UNLESS OTHERWISE SPECIFIED

	METRIC
2 Place Decimal ±.010	1 Place Dec. ±.25mm
3 Place Decimal ±.005	2 Place Dec. ±.13mm
Angles ..... ±1°	

Made for: CWIND.
Drawn by: DGW 12-11-2006
Checked by: G.Gould 1-24-07
Approval: [illegible] 1-24-07

Title: ROCKER SWITCH D.P.– D.T.– C.O. MOM.–OFF–MOM.

Division: SWITCH

Dwg. No. GR-2023C-0000