DIMENSIONS IN INCHES (METRIC-MILLIMETERS)
DO NOT SCALE DRAWING..

Drawing Number
G-133-0030

NOTE:

1. SWITCH SHALL WITHSTAND A FORCE OF 25 # MIN. APPLIED PERPENDICULAR TO THE TOP OF THE ACTUATOR WHEN THE SWITCH IS SUPPORTED CLOSELY TO THE BODY (.628 dim.)

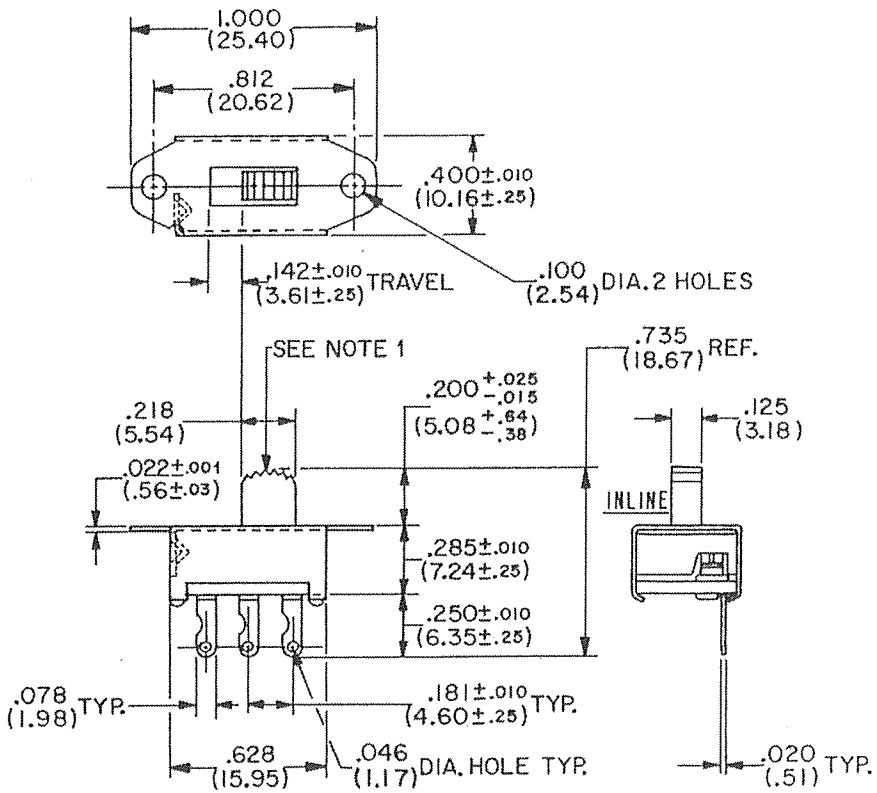

REVISIONS

0

RELEASED
E.C.J. 11-30-87

ATTENTION

THIS DRAWING AND ITS ATTACHMENTS, IF ANY, ARE PROPRIETARY TO CW INDUSTRIES AND DESCRIBE DESIGNS THAT ARE CONFIDENTIAL AND MUST NOT BE DISCLOSED UNLESS AUTHORIZED, IN WRITING, BY AN OFFICER OF CW INDUSTRIES.....

CW INDUSTRIES
Southampton, Pa. 18966

TOLERANCES UNLESS OTHERWISE SPECIFIED

	METRIC
2 Place decimal ±.010	1 Place dec. ±.25MM
3 Place decimal ±.005	2 Place dec. ±.13MM
Angles . . . . ±1°	

Made for	ALOROTOM	
Drawn by	LIS JACKSON 11-24-87	
Checker		11/30/87
Eng. appr		11/30/87

ASS'Y SWIDGET
S.P. D.T.
S.R.

Division SWITCH

Drawing Number
G-133-0030

MASTER